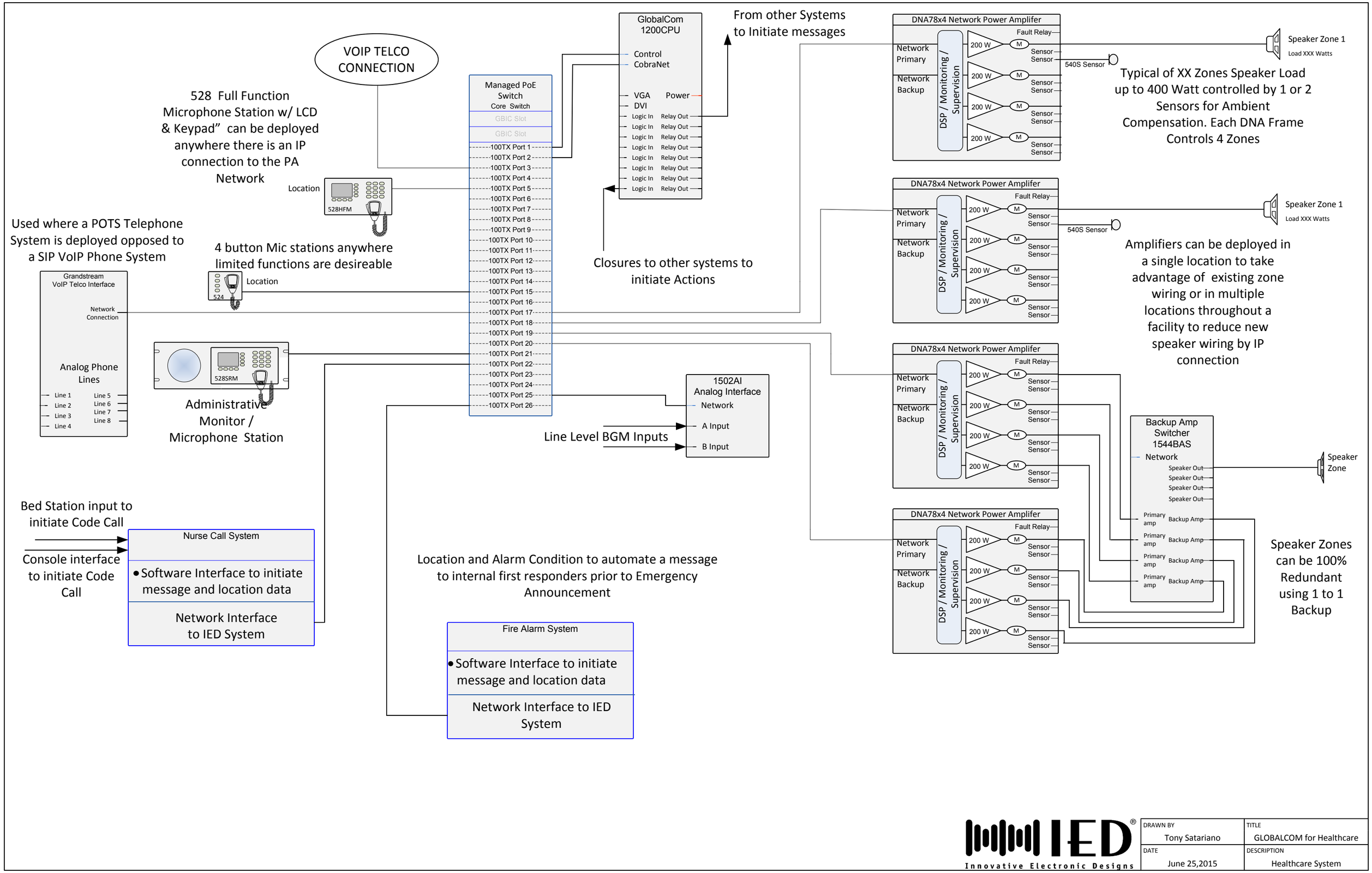
VOIP TELCO CONNECTION
528 Full Function Microphone Station w/ LCD & Keypad" can be deployed anywhere there is an IP connection to the PA Network
Location
528HFM
Used where a POTS Telephone System is deployed opposed to a SIP VoIP Phone System
4 button Mic stations anywhere limited functions are desireable
524
Location
Grandstream VoIP Telco Interface
Network Connection
Analog Phone Lines
Line 1
Line 2
Line 3
Line 4
Line 5
Line 6
Line 7
Line 8
528SRM
Administrative Monitor / Microphone Station
Bed Station input to initiate Code Call
Console interface to initiate Code Call
Nurse Call System
• Software Interface to initiate message and location data
Network Interface to IED System
Managed PoE Switch
Core Switch
GBIC Slot
GBIC Slot
100TX Port 1
100TX Port 2
100TX Port 3
100TX Port 4
100TX Port 5
100TX Port 6
100TX Port 7
100TX Port 8
100TX Port 9
100TX Port 10
100TX Port 11
100TX Port 12
100TX Port 13
100TX Port 14
100TX Port 15
100TX Port 16
100TX Port 17
100TX Port 18
100TX Port 19
100TX Port 20
100TX Port 21
100TX Port 22
100TX Port 23
100TX Port 24
100TX Port 25
100TX Port 26
GlobalCom 1200CPU
Control
CobraNet
VGA
DVI
Power
Logic In
Relay Out
From other Systems to Initiate messages
Closures to other systems to initiate Actions
1502AI Analog Interface
Network
A Input
B Input
Line Level BGM Inputs
Location and Alarm Condition to automate a message to internal first responders prior to Emergency Announcement
Fire Alarm System
• Software Interface to initiate message and location data
Network Interface to IED System
DNA78x4 Network Power Amplifer
Network Primary
Network Backup
DSP / Monitoring / Supervision
200 W
M
Fault Relay
Sensor
540S Sensor
Speaker Zone 1
Load XXX Watts
Typical of XX Zones Speaker Load up to 400 Watt controlled by 1 or 2 Sensors for Ambient Compensation. Each DNA Frame Controls 4 Zones
Amplifiers can be deployed in a single location to take advantage of existing zone wiring or in multiple locations throughout a facility to reduce new speaker wiring by IP connection
Backup Amp Switcher 1544BAS
Network
Speaker Out
Primary amp
Backup Amp
Speaker Zone
Speaker Zones can be 100% Redundant using 1 to 1 Backup
IED
Innovative Electronic Designs
DRAWN BY
Tony Satariano
TITLE
GLOBALCOM for Healthcare
DATE
June 25,2015
DESCRIPTION
Healthcare System