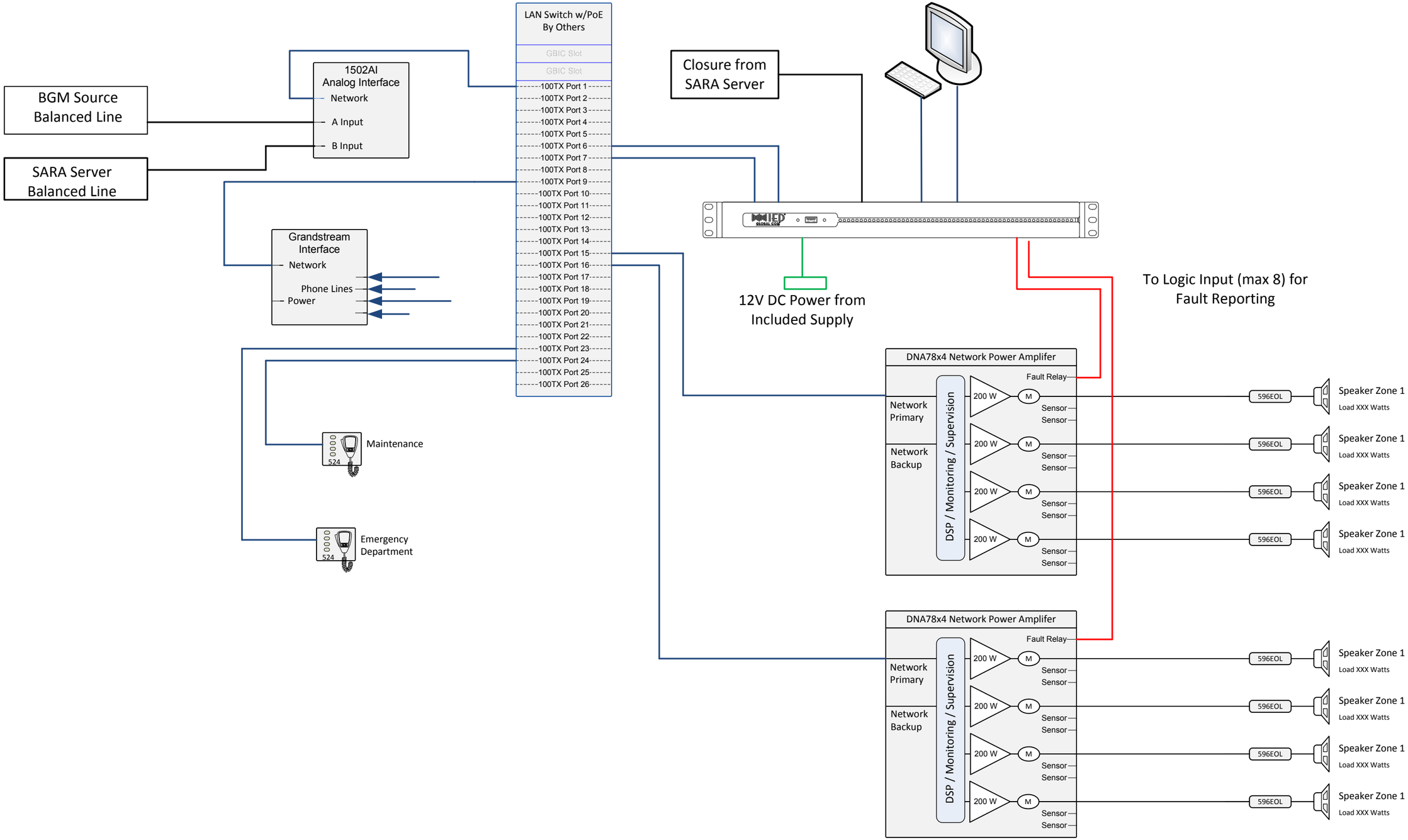

DRAWN BY	TITLE
Tony Satariano	Copley Hospital Morrisville VT
DATE	DESCRIPTION
Oct 9,2015	GLOBALCOM Paging System

IED® Innovative Electronic Designs